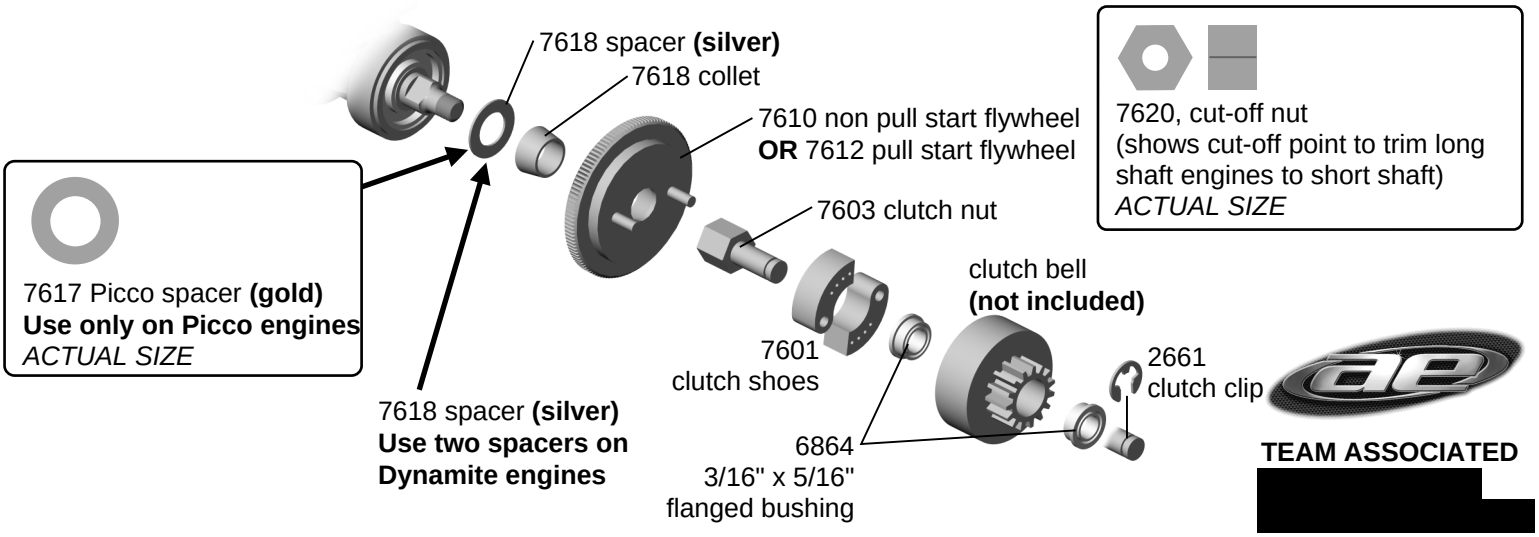CLUTCH KIT ASSEMBLY #7621 Non Pull Start #7622 Pull Start